KITZ PN Rating Valves

Bronze & Brass Valves / Cast Iron Valves / Butterfly Valves

KITZ CORPORATION

CONTENTS

Pressure-Temperature ratings (P-T ratings)

Maximum permissible working pressure (bar)

Service temperature (˚C)	Bronze & Brass valves			Cast iron valves
	PN16	PN20	PN25	PN16
-10 to 66	16.0	20.0	25.0	16
100				
120	13.5	17.2	21.8	
150	9.5	13.0	16.5	14.4
170	7.0	10.3	12.8	13.7
180	–	9.0	11.3	13.4
186	–	–	10.5	13.2
198	–	–	–	12.9
200	–	–	–	12.8

(Note) : Intermediate values may be obtained by linear interpolation.
*See page 15 for P-T ratings of Butterfly Valves.

⚠CAUTION	Don't use our products in flammable or toxic gas services.

*Specifications are subject to change without notice.
*For detail information, please check with our individual catalogs, or contact Kitz Corp.

KITZ "K-Metal": Unique Dezincification Resistant Material (UNS No.C35350)

Water pollution and employment of new piping material have amplified valve dezincification problems.

What is dezincification?

The copper alloy used in bronze valves contains zinc, tin, and lead with copper as a base. When bronze valves are subjected to unfavorable service conditions, the zinc component contained in the copper alloy separates from the copper base, and the metal corrodes. This is called dezincification.

In case of bronze valve, the body, bonnet, and other cast bronze parts hardly corrode due to the small percent of zinc contained in the alloy. But brass valve parts such as stems, which contain 40% zinc, often corrodes due to extreme dezincification.

What causes dezincification?

The following factors cause dezincification. These factors are generally believed to occur together, rather than independently.

1. Excessive aqueous solution in acidity.
2. Warm water containing excessive free carbonic acid with high electric conductivity.
3. High electric conductivity with excessive presence of chlorides and sulfides.
4. Copper or vinyl chloride pipes.
5. Excessive dissolved oxygen.

What is K-Metal?

To prevent dezincification, KITZ Corporation developed **K-Metal** as the stem material of bronze/brass valves. The test data given below compare the properties of **K-Metal** with ASTM B124, B16 and B62, and also with another dezincification resistant material introduced by one of our competitors in Japan.

The comparisons prove **K-Metal**'s overall high performance and explain why KITZ bronze/brass valves offer longer service life. The extent of the corrosion and dezincification compared here are the values recorded after two weeks of laboratory experiments. Australian Standard C316 was applied to the measurement of dezincification depth.

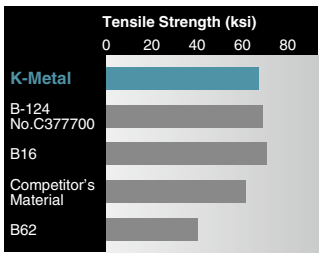

Fig. 1 Compared tensile strength

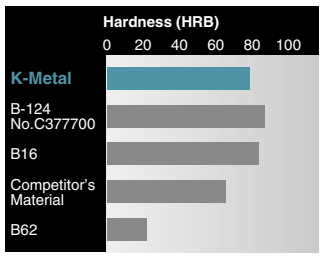

Fig. 2 Compared hardness

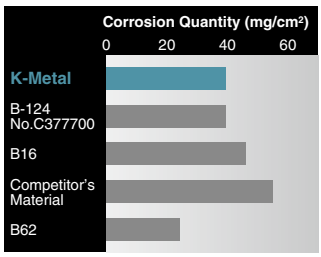

Fig. 3 Compared corrosion (1mg/cm²=0.014mlb/in²)

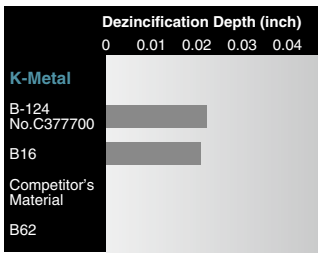

Fig. 4 Compared dezincification (to AS C316)

Color Cording (Bronze & Brass Valves)

Color coding is made on a spoke of the handwheel of Bronze & Brass gate or globe valves on the cover of check valves and strainers.

Color

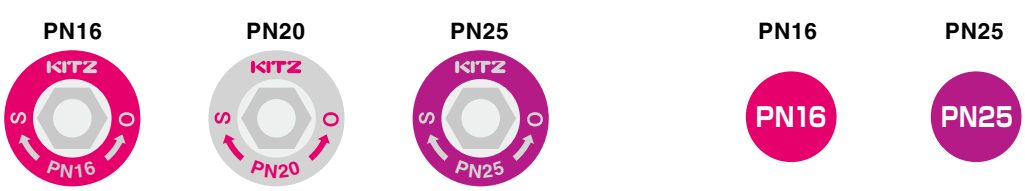

Gate and Globe Valves

Check Valves and Strainers

Cast Iron Valves, Trim Materials

KITZ cast iron valves are provided with either one of the two trim materials table below for versarility of service applications. Color coding is made on a spoke of the handwheel "Plate A" and on the body "Plate B" of gate or globe valves and on the cover of swing check valves and strainer.

Trim Material	Color cording		
	Plate A	Plate B	Suffix of Fig.
Bronze seats / Brass stem	Blue	Black	–
Stainless seats / Stem	Red	Red	M

PN16 BRASS GATE VALVE

Screwed-in Bonnet, Non-rising Stem
Threaded ends to BS21 (JIS B0203)

16 bar at 100˚C, 7 bar at 170˚C, P-T rating : See page 01

Fig. PN16FH

• Threaded ends to BS21(JIS B0203)

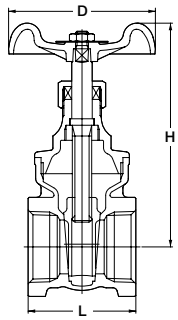

Materials

Parts	Material
Body	Brass
Bonnet	Brass
Stem	Dezincification Resistant Brass
Disc	Brass
Gland Packing	Aramid Fibers Graphite

Dimensions mm

Nominal Size	inch	1/2	3/4	1	1 1/4	1 1/2	2
	DN	15	20	25	32	40	50
L Threaded end to end		42	47	50	60	63	72
H Height		73	87	97	118	126	154
D Handwheel diameter		50	55	60	70	80	90

PN16 BRONZE GATE VALVE

Screwed-in Bonnet, Non-rising Stem
Threaded ends to BS21(JIS B0203)

16 bar at 100˚C, 7 bar at 170˚C, P-T rating : See page 01

Fig. PN16S

• Threaded ends to BS21(JIS B0203)

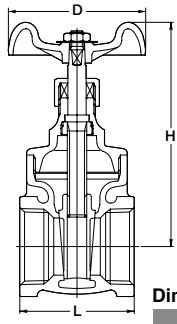

Materials

Parts	Material
Body	Bronze
Bonnet	Brass
Stem	Dezincification Resistant Brass
Disc	Brass
Gland Packing	Aramid Fibers Graphite

Dimensions mm

Nominal Size	inch	1/2	3/4	1	1 1/4	1 1/2	2
	DN	15	20	25	32	40	50
L Threaded end to end		42	47	50	60	63	72
H Height		75	86	97	117	126	154
D Handwheel diameter		50	55	60	70	80	90

PN20 BRONZE GATE VALVE

Screwed-in Bonnet, Non-rising Stem
Threaded ends to BS21(JIS B0203)

20 bar at 100˚C, 9 bar at 180˚C, P-T rating : See page 01

Fig. PN20E

• Threaded ends to BS21(JIS B0203)

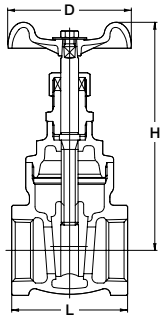

Materials

Parts	Material
Body	Bronze
Bonnet	Brass
Stem	Dezincification Resistant Brass
Disc	Bronze
Gland Packing	Aramid Fibers Graphite

Dimensions mm

Nominal Size	inch	1/2	3/4	1	1 1/4	1 1/2	2
	DN	15	20	25	32	40	50
L Threaded end to end		48	53	62	69	75	86
H Height,		96	111	122	141	164	197
D Handwheel diameter		55	60	70	80	90	100

PN25 BRONZE GATE VALVE

Screwed-over Bonnet, Non-rising Stem
Threaded ends to BS21 (JIS B0203)

25 bar at 100˚C, 10.5 bar at 186˚C, P-T rating : See page 01

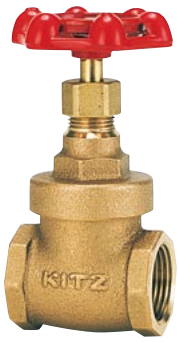

Fig. PN25H

• Threaded ends to BS21(JIS B0203)

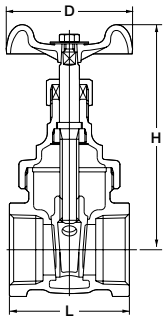

Materials

Parts	Material
Body	Bronze
Bonnet	Bronze
Stem	Dezincification Resistant Brass
Disc	Dezincification Resistant Brass*/Bronze
Gland Packing	Aramid Fibers Graphite

*Size 1/2 only

Dimensions mm

Nominal Size	inch	1/2	3/4	1	1 1/4	1 1/2	2
	DN	15	20	25	32	40	50
L	Threaded end to end	45	50	57	61	67	74
H	Height	80	90	105	118	135	159
D	Handwheel diameter	50	55	60	70	80	90

PN25 BRONZE GATE VALVE

Screwed-over Bonnet, Non-rising Stem
Solder joint ends to BS 864

25 bar at 100˚C, 10.5 bar at 186˚C, P-T rating : See page 01

Fig. PN25CH

• Solder joint ends to BS864

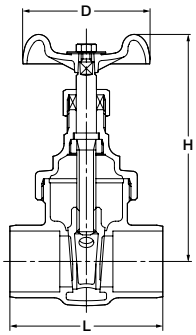

Materials

Parts	Material
Body	Bronze
Bonnet	Bronze
Stem	Dezincification Resistant Brass
Disc	Dezincification Resistant Brass*/Bronze
Gland Packing	Aramid Fibers Graphite

*Size 1/2 only

Caution	Solder joint end valves should not be used in service where the temperature of line fluid is higher than the softening point of solder.

Dimensions mm

Nominal Size	inch	1/2	3/4	1	1 1/4	1 1/2	2
	DN	15	20	25	32	40	50
L		46	61	72	78	87	102
H	Height	80	90	105	118	135	159
D	Handwheel diameter	50	55	60	70	80	90

PN16 BRONZE GLOBE VALVE

Screwed-in Bonnet, Rising Stem
Threaded ends to BS21 (JIS B0203)

16 bar at 100˚C, 7 bar at 170˚C, P-T rating : See page 01

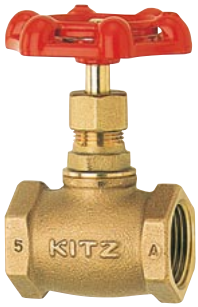

Fig. PN16A

• Threaded ends to BS21(JIS B0203)

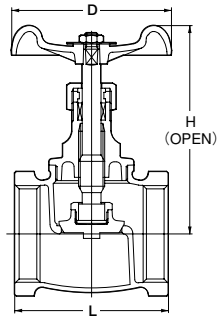

Materials

Parts	Material
Body	Bronze
Bonnet	Brass
Stem	Dezincification Resistant Brass
Disc	Bronze
Gland Packing	Aramid Fibers Graphite

Dimensions mm

Nominal Size	inch	1/2	3/4	1	1 1/4	1 1/2	2
	DN	15	20	25	32	40	50
L Threaded end to end		48	53	63	73	81	94
H Height, valve open		69	80	94	104	127	147
D Handwheel diameter		55	60	70	80	90	100

PN16 BRONZE GLOBE VALVE

Union Bonnet, Rising Stem, Soft Seated Disc
Threaded ends to BS21 (JIS B0203)

16 bar at 100˚C, 7 bar at 170˚C, P-T rating : See page 01

Fig. PN16G

• Threaded ends to BS21(JIS B0203)

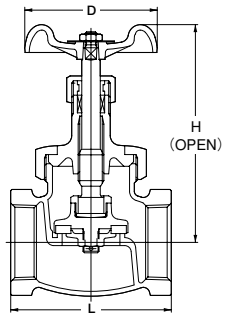

Materials

Parts	Material
Body	Bronze
Bonnet	Brass
Stem	Dezincification Resistant Brass
Disc	Reinforced PTFE
Gland Packing	Aramid Fibers Graphite

Dimensions mm

Nominal Size	inch	1/2	3/4	1	1 1/4	1 1/2	2
	DN	15	20	25	32	40	50
L Threaded end to end		57	66	76	88	100	120
H Height, valve open		100	110	120	140	156	185
D Handwheel diameter		60	70	80	90	100	115

PN20 BRONZE GLOBE VALVE

Union Bonnet, Rising Stem, Soft Seated Disc
Threaded ends to BS21 (JIS B0203)

20 bar at 100˚C, 9 bar at 180˚C, P-T rating : See page 01

Fig. PN20D

• Threaded ends to BS21(JIS B0203)

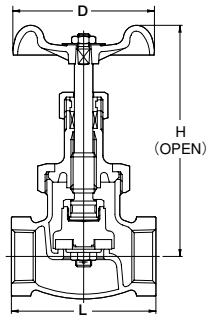

Materials

Parts	Material
Body	Bronze
Bonnet	Brass/Bronze*
Stem	Dezincification Resistant Brass
Disc	Reinforced PTFE
Gland Packing	Aramid Fibers Graphite

*Size 1 1/2 & 2

Dimensions mm

Nominal Size	inch	1/2	3/4	1	1 1/4	1 1/2	2
	DN	15	20	25	32	40	50
L Threaded end to end		64	78	90	105	120	145
H Height, valve open		113	138	156	184	187	212
D Handwheel diameter		60	90	100	115	115	135

PN25 BRONZE GLOBE VALVE

Screwed-in Bonnet, Rising Stem
Threaded ends to BS21 (JIS B0203)

25 bar at 100˚C, 10.5 bar at 186˚C, P-T rating : See page 01

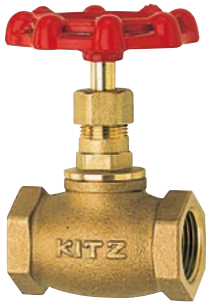

Fig. PN25C

• Threaded ends to BS21(JIS B0203)

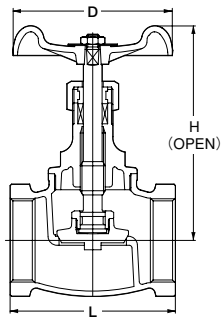

Materials

Parts	Material
Body	Bronze
Bonnet	Brass
Stem	Dezincification Resistant Brass
Disc	Bronze
Gland Packing	Aramid Fibers Graphite

Dimensions mm

Nominal Size	inch	1/2	3/4	1	1 1/4	1 1/2	2
	DN	15	20	25	32	40	50
L Threaded end to end		53	65	77	85	100	119
H Height, valve open		79	93	104	127	145	174
D Handwheel diameter		60	70	80	90	100	115

PN25 BRONZE Y-PATTERN STRAINER

Y-Pattern Body, Screwed Cap,
304 Stainless Steel Screen
Threaded ends to BS21 (JIS B0203)

25 bar at 100˚C, 10.5 bar at 186˚C, P-T rating : See page 01

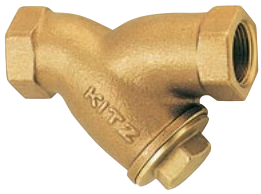

Fig. PN25Y

• Threaded ends to BS21(JIS B0203)

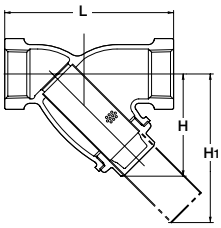

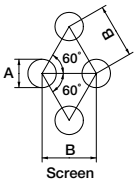

Materials

Parts	Material
Body	Bronze
Body cap	Brass
Screen	Type 304 stainless steel

	A	B
1/2 to 2	1.4	2.4

Dimensions mm

Nominal Size	inch	1/2	3/4	1	1 1/4	1 1/2	2
	DN	15	20	25	32	40	50
L Threaded end to end		80	100	115	135	160	195
H Height		49	57	70	82	98	121
H1		68	83	105	124	149	188

PN40 BRASS BALL VALVE, FULL PORT

Screwed Body Cap, Blowout-proof Stem,
Double O-ring stem seal,
Threaded ends to BS21(JIS B0203)

40 bar for W.O.G. non-shock, 10 bar at 150˚C

Fig. PN40SZA

• Threaded ends to BS21(JIS B0203)

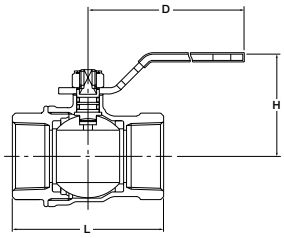

Materials

Parts	Material
Body	Brass
Body cap	Brass
Stem	Brass (nickel plated)
Ball	Brass (chrome plated)
Ball seat	PTFE
O-ring	FKM

Dimensions mm

Nominal Size	inch	1/2	3/4	1	1 1/4	1 1/2	2
	DN	15	20	25	32	40	50
L Threaded end to end		53	60	72	84	92	110
H Height		40	43	50	55	65	72
D Length of Handle		80	80	110	110	150	150

PN16 BRONZE SWING CHECK VALVE

Screwed Cap, Swing Type Disc
Threaded ends to BS21 (JIS B0203)

16 bar at 100˚C, 7 bar at 170˚C, P-T rating : See page 01

Fig. PN16R

• Threaded ends to BS21(JIS B0203)

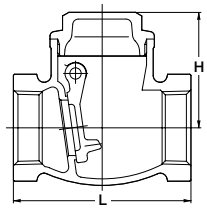

Materials

Parts	Material
Body	Bronze
Cap	Brass
Hinge pin	Brass
Disc	Brass

Dimensions mm

Nominal Size	inch	1/2	3/4	1	1 1/4	1 1/2	2
	DN	15	20	25	32	40	50
L Threaded end to end		60	70	80	92	102	122
H Height		39	45	52	62	67	79

PN16 BRONZE Y-PATTERN SWING CHECK VALVE

Screwed Cap, Swing Type Disc
Threaded ends to BS21 (JIS B0203)

16 bar at 100˚C, 7 bar at 170˚C, P-T rating : See page 01

Fig. PN16YR

• Threaded ends to BS21(JIS B0203)

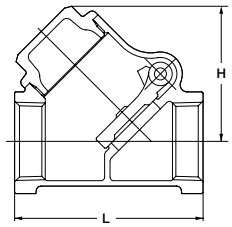

Materials

Parts	Material
Body	Bronze
Cap	Brass
Disc	Bronze

Dimensions mm

Nominal Size	inch	1/2	3/4	1	1 1/4	1 1/2	2
	DN	15	20	25	32	40	50
L Threaded end to end		56	70	80	95	110	128
H Height		40	49	58	71	80	95

PN25 BRONZE LIFT CHECK VALVE

Screwed Cap, Lift Type Disc
Threaded ends to BS21 (JIS B0203)

25 bar at 100˚C, 10.5 bar at 186˚C, P-T rating : See page 01

Fig. PN25F

• Threaded ends to BS21(JIS B0203)

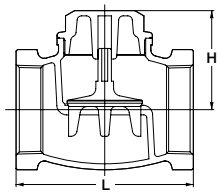

Materials

Parts	Material
Body	Bronze
Cap	Brass
Disc	Bronze

Dimensions mm

Nominal Size	inch	1/2	3/4	1	1 1/4	1 1/2	2
	DN	15	20	25	32	40	50
L Threaded end to end		53	65	77	85	100	119
H Height		28	34	42	50	56	67

KITZ Bronze and Brass Materials to JIS Standards

JIS H5120-2006 (Copper & Copper Alloy Castings)

Cast bronze Class 6	Designation	Chemical composition (%)										Mechanical property	
		Cu	Sn	Zn	Pb	Ni	Fe	P	Sb	Al	Si	Tensile strength 195 Min. (N/mm²)	Elongation (%) 15 Min.
	CAC406 (BC6)	83.0-87.0	4.0-6.0	4.0-6.0	4.0-6.0	1.0 Max.	0.3 Max.	0.05 Max.	0.2 Max.	0.01 Max.	0.01 Max.		

JIS H3250-2006 (Copper & Copper Alloy Rods and Bars)

Forged brass Alloy No. 3771	Designation		Chemical composition (%)				Mechanical property	
	Extruded	Drawn	Cu	Pb	Fe + Sn	Zn	Tensile strength 315 Min. (N/mm²)	Elongation (%) 15 Min.
	C3771BE	C3771BD	57.0-61.0	1.0-2.5	1.0 Max.	Remainder		

JIS H3250-2006 (Copper & Copper Alloy Rods and Bars)

Free-cutting brass Alloy No. 3604	Designation		Chemical composition (%)					Mechanical property	
	Extruded	Drawn	Cu	Pb	Fe	Fe + Sn	Zn	Tensile strength 335 Min. (N/mm²)	Elongation (%) —
	C3604BE	C3604BD	57.0-61.0	1.8-3.7	0.5 Max.	1.0 Max.	Remainder		

KITZ Bronze and Brass Materials to ASTM Standards

ASTM B62-2002

Chemical composition (%)											Mechanical properties		
Copper	Tin	Lead	Zinc	Nickel & cobalt	Iron	Sulfer	Phosphorus	Antimony	Aluminum	Silicon	Minimum		
84.0-86.0	4.0-6.0	4.0-6.0	4.0-6.0	1.0 Max.	0.30 Max.	0.08 Max.	0.05 Max.	0.25 Max.	0.005 Max.	0.005 Max.	Tensile strength 30 ksi	Yield strength 14 ksi	Elongation in 2 in. 20%

ASTM B584 C84400-2004

Chemical composition (%)											Mechanical properties		
Copper	Tin	Lead	Zinc	Nickel & cobalt	Iron	Sulfer	Phosphorus	Antimony	Aluminum	Silicon	Minimum		
78.0-82.0	2.3-3.5	6.0-8.0	7.0-10.0	1.0 Max.	0.40 Max.	0.08 Max.	0.02 Max.	0.25 Max.	0.005 Max.	0.005 Max.	Tensile strength 29 ksi	Yield strength 13 ksi	Elongation in 2 in. 18%

ASTM B283 C37700-2004

Chemical composition (%)				Mechanical properties		
Copper	Lead	Iron	Zinc	Minimum		
58.0-61.0	1.5-2.5	0.30 Max.	Remainder	Tensile strength 50 ksi	Yield strength 18 ksi	Elongation in 4x thickness 25%

PN16 IRON GATE VALVE

Bolted bonnet, Inside screw, Non-rising stem, Flanged ends.

16 bar at 120˚C, 12.8 bar at 200˚C, P-T rating : See page 01

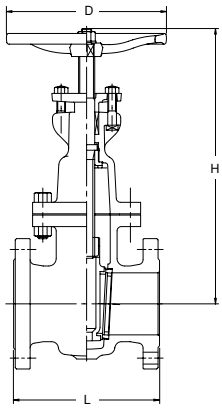

Fig. EN16FCW

• Bronze trim

Fig. EN16FCWI

• Bronze trim, with position indicator

Materials

Parts		Material	Specifications
Body		Cast Iron	EN-GJL-200
Bonnet		Cast Iron	EN-GJL-200
Stem		Forged Brass	JIS H3250 C3771BD or BE
Disc		Cast Iron	EN-GJL-200
Disc seat ring		Cast Bronze	JIS H5120 CAC406
Body seat ring		Cast Bronze	JIS H5120 CAC406
Gland		Ductile Iron	
Gland packing		Flexible Graphite + PTFE Braided	
Gasket		Graphite	
Gland bolt/nut		Carbon Steel	
Bonnet bolt/nut		Carbon Steel	
Bonnet bushing		Cast Bronze	JIS H5120 CAC406
Hand wheel	DN 50 to 200	Cast Iron	
	DN 250 & 300	Ductile Iron	

Design Specifications

Items	
Shell wall thickness	KITZ Standard
Face-to-face or End-to-end dimensions	EN 1171 PN16 Basic Series 3
End Connection	EN 1092-2 PN16

Dimensions

Valve Size	inch	2	2½	3	4	5	6	8	10	12
	DN	50	65	80	100	125	150	200	250	300
L	Face-to-face	178	190	203	229	254	267	292	330	356
H	Height	271	297	352	394	451	518	618	760	867
D	Handwheel Diameter	180	180	200	250	280	300	350	400	450

PN16 IRON GATE VALVE

Bolted bonnet, Outside screw & yoke, Rising stem, Flanged ends.

16 bar at 120˚C, 12.8 bar at 200˚C, P-T rating : See page 01

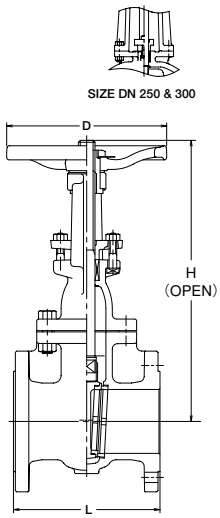

Fig. EN16FCL

• Bronze trim

Fig. EN16FCLM

• Stainless steel trim

Materials

Parts	Material	Specifications	
		EN16 FCL	EN16FCLM
Body	Cast Iron	EN-GJL-200	
Bonnet	Cast Iron	EN-GJL-200	
Stem	Forged Brass	JIS H3250 C3771BD or BE	ASTM A276 Type316
Disc	Cast Iron	EN-GJL-200	
Disc seat ring	Cast Bronze	JIS H5120 CAC406	ASTM A182 Gr.F316
Body seat ring	Cast Bronze	JIS H5120 CAC406	ASTM A182 Gr.F316
Gland	Ductile Iron		
Gland packing	Flexible Graphite + PTFE Braided		
Gasket	Graphite		
Gland bolt/nut	Carbon Steel		
Bonnet bolt/nut	Carbon Steel		
Yoke sleeve	Cast Bronze		
Hand wheel DN 50 to 200	Cast Iron		
DN 250 & 300	Ductile Iron		

Design Specifications

Items	
Shell wall thickness	KITZ Standard
Face-to-face or End-to-end dimensions	EN 1171 PN16 Basic Series 3
End Connection	EN 1092-2 PN16

Dimensions

mm

Valve Size	inch	2	2½	3	4	5	6	8	10	12
	DN	50	65	80	100	125	150	200	250	300
L	Face-to-face	178	190	203	229	254	267	292	330	356
H	Height (OPEN)	343	389	462	547	648	759	956	1168	1363
D	Handwheel Diameter	170	170	200	250	280	300	350	400	450

PN16 IRON GLOBE VALVE

Bolted bonnet, Outside screw & yoke, Rising stem, Flanged ends.

16 bar at 120˚C, 12.8 bar at 200˚C, P-T rating : See page 01

Fig. EN16FCJ
• Bronze trim

Fig. EN16FCJM
• Stainless steel trim

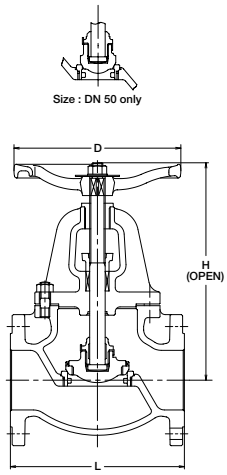

Materials

Parts		Material	Specifications	
			EN16 FCJ	EN16FCJM
Body		Cast Iron	EN-GJL-200	
Bonnet		Cast Iron	EN-GJL-200	
Stem		Forged Brass	JIS H3250 C3771BD or BE	ASTM A276 Type316
Disc	DN 50 only	Stainless Steel	JIS H5120 CAC406	ASTM A351 Gr.CF8M
	DN 65 to 250	Cast Iron	EN-GJL-200	
Disc seat ring		Cast Bronze	JIS H5120 CAC406	ASTM A182 Gr.F316
Body seat ring		Cast Bronze	JIS H5120 CAC406	ASTM A182 Gr.F316
Gland		Ductile Iron		
Gland packing		Flexible Graphite + PTFE Braided		
Gasket		Graphite		
Gland bolt/nut		Carbon Steel		
Bonnet bolt/nut		Carbon Steel		
Yoke bush		Cast Bronze		
Hand wheel	DN 50 to 150	Cast Iron		
	DN 200 & 250	Ductile Iron		

Design Specifications

Items	
Shell wall thickness	KITZ Standard
Face-to-face or End-to-end dimensions	EN 558 PN16 Basic Series 10
End Connection	EN 1092-2 PN16

Dimensions

mm

Valve Size	inch	2	2½	3	4	5	6	8	10
	DN	50	65	80	100	125	150	200	250
L Face-to-face		203	216	241	292	330	356	495	622
H Height (OPEN)		277	307	353	404	467	533	620	665
D Handwheel Diameter		180	180	225	280	300	350	450	450

PN16 IRON SWING CHECK VALVE

Bolted cover, Swing type disc, Flanged ends.

16 bar at 120˚C, 12.8 bar at 200˚C, P-T rating : See page 01

Fig. EN16FCO
• Bronze trim

Fig. EN16FCOM
• Stainless steel trim

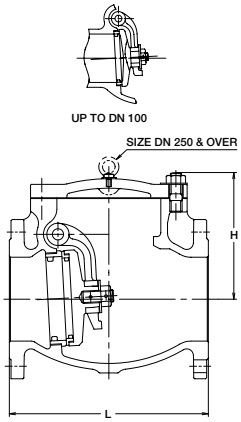

Materials

Parts		Material	Specifications	
			EN16 FCO	EN16FCOM
Body		Cast Iron	EN-GJL-200	
Cover		Cast Iron	EN-GJL-200	
Hinge pin		Stainless Steel	ASTM A276 Type403	ASTM A276 Type316
Disc	DN 50 to 100	Stainless Steel	JIS H5120 CAC406	ASTM A276 Type316
	DN 125 to 300	Cast Iron	EN-GJL-200	
Disc seat ring		Cast Bronze	JIS H5120 CAC406	ASTM A182 Gr.F316
Body seat ring		Cast Bronze	JIS H5120 CAC406	ASTM A182 Gr.F316
Arm		Stainless Steel	ASTM A351 Gr.CF8	
Gasket		Graphite		
Cover bolt/nut		Carbon Steel		
Plug		Carbon Steel		

Design Specifications

Items	
Shell wall thickness	KITZ Standard
Face-to-face or End-to-end dimensions	EN 558 PN16 Basic Series 10
End Connection	EN 1092-2 PN16

Dimensions

mm

Valve Size	inch	2	2½	3	4	5	6	8	10	12
	DN	50	65	80	100	125	150	200	250	300
L Face-to-face		203	216	241	292	330	356	495	622	698
H Height		111	121	145	165	207	225	268	315	356

PN16 IRON WAFER CHECK VALVE

Dual plate, No by-pass valve mounted, Wafer type body to PN16

16 bar at 80˚C Non-shock water (NBR seat) 16 bar at 100˚C Non-shock water (EPDM seat)

Fig. PN16FWNBM
• NBR seat

Fig. PN16FWNBME
• EPDM seat

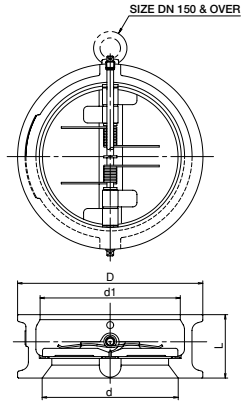

Materials

Parts	Material	ASTM Spec.	
		PN16FWNBM	PN16FWNBME
Body	Cast iron	A126 CL.B	
Seat*	Rubber	NBR	EPDM
Disc**	Satinless steel	A351 Gr.CF8M	
Pin	Satinless steel	A276 Type 304	
Plug	Satinless steel	A276 Type 304	
Spring	Satinless steel	A313 Type 316	

*Vulcanized to the body.
**Bronze disc & 304SS disc available upon request.

Design Specifications

Items	
Shell Wall thickness	KITZ Standard
Face-to-face or End-to-end dimensions	KITZ Standard
End Connection	Wafer type(EN1092 PN16)

Dimensions

mm

Valve Size	inch	2	2½	3	4	5	6	8	10	12
	DN	50	65	80	100	125	150	200	250	300
L		54	54	57	64	70	76	95	108	143
D		109	129	144	164	194	220	275	331	386
d_1		60	73	89	114	141	168	219	273	324
d		55	68	82	112	134	163	207	263	305

PN16 IRON Y-PATTERN STRAINER

Bolted cover, Y-Pattern body, Punched stainless steel plate screen, Flanged ends.

16 bar at 120˚C, 12.8 bar at 200˚C, P-T rating : See page 01

Fig. EN16FCY
• Screen : 304

Fig. EN16FCYM
• Screen : 316

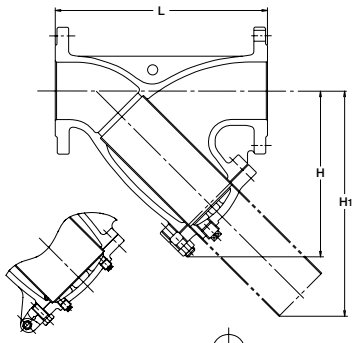

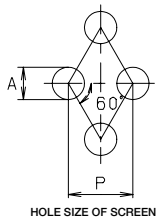

Materials

Parts	Material	Specifications	
		EN16 FCY	EN16FCYM
Body	Cast Iron	EN-GJL 200	
Cover	Cast Iron	EN-GJL 200	
Screen	Stainless Steel	ASTM A276 Type304	ASTM A276 Type316
Gasket	Graphite		
Cover bolt/nut	Carbon Steel		
Plug	Stainless Steel	ASTM A276 Type304	

Screen dimensions

Valve Size	A	P
DN 50 only	1.4ø	2.4mm
DN 65 to 125	1.5ø	2.5mm
DN 150 & 200	3.0ø	5.0mm
DN 250 & 300	5.0ø	7.0mm

Design Specifications

Items	
Shell wall thickness	KITZ Standard
Face-to-face or End-to-end dimensions	KITZ Standard
End Connection	EN 1092-2 PN16

Dimensions

mm

Valve Size	inch	2	2½	3	4	5	6	8	10	12
	DN	50	65	80	100	125	150	200	250	300
L Face-to-face		250	285	315	370	420	490	570	680	800
H Height		168	212	242	284	325	370	440	515	600
H_1		208	289	335	388	446	497	589	694	818

KITZ DJ Series Butterfly Valves

Thorough pursuit of functions required for butterfly valves
Variety of product ranges to comply with customers' requirements

WRAS APPROVED PRODUCT
*EPDM seat

Design Features

Molded-in (bonded) seat structure (Size 2 to 12)

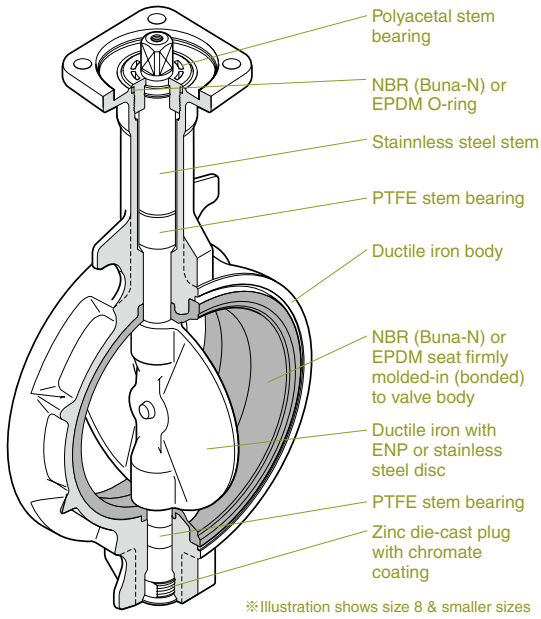

※Illustration shows size 8 & smaller sizes

Replaceable seat structure (Size 14 to 24)

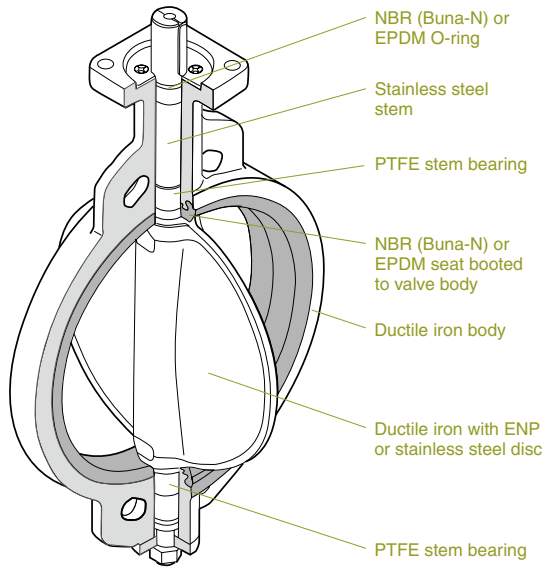

Non-peeling Seat-to-body Construction

Molded-in (bonded) seat structure is employed for size **2 to 12**. Larger sized valves are provided with replaceable seat. This non-peeling seat-to-body construction assures maintenance-free application for **high fluid velocity service*1**, **vacuum service*2** and handling surging fluid velocity. It also guarantees peel-free valve mounting on pipelines.

***1 Maximum 4 meters/second for on-off service for valves up to size 12, and 3 meters/second for size 14 and larger.**
***2 Up to 30 torr. Vacuum service is option for size 14 and larger.**

Spherical design for Discs and Seats

Rubber seats are spherically designed where they contact top and bottom stems. This protects widely designed rubber seats from peeling or deformation for prolonged service life of valves. Thinly streamlined metal discs are the results of elaborate laboratory study to ultimately minimize the pressure loss.

Choice of Materials and Operating Devices

Choice among 4 disc and 2 seat materials and manual, pneumatic or electric valve operating devices makes service applications highly versatile.

Integral ISO 5211 Actuator Mounting Flange

Any pneumatic or electric valve actuators provided with ISO 5211 valve mounting flanges can be easily mounted for actuation of valves in the field.

Low Valve Operating Torque

Low operating torques are designed low for extension of valve service life and economic consideration in selection of valve operating devices.

Light-designed for Operation Efficiency

Designed much lighter than our conventional series for operation efficiency in piping

Emission-free Stem Sealing Mechanism

Prevention of external fluid leakage is maximized with a rubber O-ring assembled around the top stem and tight contact between spherically designed rubber seat and spherically designed top and bottom end of the disc.

Dew condenstation prevention

Dew condenstation prevention type is optionally available with heat insulating plate (size 2 to 6) or stainless steel stand (size 8 to 24).

Explanation of Product Code

G - PN16 DJ L U E

① ② ③ ④ ⑤ ⑥

① Valve operation

None .....Lever handle
G .....Gear
B(S).....Type B(S) pneumatic actuator
FA(S) .....Type FA(S) pneumatic actuator
EXS110/200...Type EXS KELMO® electric actuator
EXD110/200...Type EXD KELMO® electric proportional control actuator

② Class

PN16... EN1092 PN 16

③ Valve material and design

DJ.....Ductile iron DJ series

④ Connection

None....Wafer
L.....Lugged

⑤ Disc material

None....Ductile iron (Ni-plated)
U..... 304 stainless steel
M..... 316 stainless steel
A..... Aluminum bronze

⑥ Seat material

None....NBR (Buna-N)
E.....EPDM

PN16 WAFER TYPE

Lever Operated Max. service pressure 16 bar, P-T rating : see page 15.

EN PN16 Design
PN16DJ □□

□□ of product coding are disc and seat material coding

Please refer to page 12.

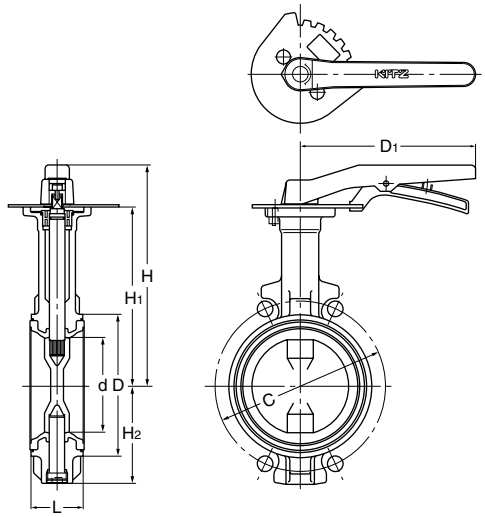

Dimensions (mm)

Nominal Size inch	Nominal Size mm	d	H	H1	H2	L	D	C	D1
2	50	50	191	147	67	43	90	125	180
2 1/2	65	65	199	155	75	46	104	145	180
3	80	80	217	173	91	46	124	160	180
4	100	100	227	183	101	52	146	180	180
5	125	125	265	211	127	56	176	210	230
6	150	150	277	223	139	56	206	240	230
8	200	197	295	248	169	60	257	295	350

PN16 WAFER TYPE

Gear Operated Max. service pressure 16 bar, P-T rating : see page 15.

EN PN16 Design
G-PN16DJ □□

□□ of product coding are disc and seat material coding

Please refer to page 12.

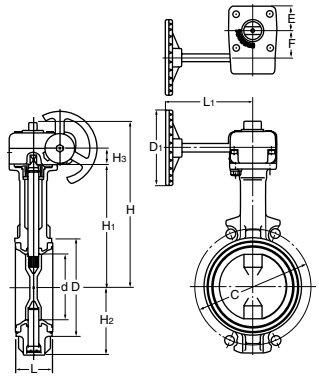

Dimensions (mm)

Nominal Size inch	Nominal Size mm	d	H	H1	H2	H3	L	D	C	D1	L1	E	F
2	50	50	194	147	67	19	43	90	125	80	122	29	28
2 1/2	65	65	202	155	75	19	46	104	145	80	122	29	28
3	80	80	236	173	91	24	46	124	160	110	135	36	40
4	100	100	246	183	101	24	52	146	180	110	135	36	40
5	125	125	274	211	127	24	56	176	210	110	150	36	40
6	150	150	286	223	139	24	56	206	240	110	150	36	40
8	200	197	325	248	169	32	60	257	295	170	180	51	63
10	250	246	381	304	219	32	68	312	355	250	250	51	63
12	300	295	406	329	244	32	78	364	410	250	250	51	63
14	350	333	461	360	309	60	78	407	470	360	350	68	89
16	400	385	516	415	348	60	102	466	525	360	350	68	89
18	450	434	540	439	372	60	114	522	585	360	350	68	89
20	500	482	623	488	423	65	127	575	650	500	400	90	134
24	600	579	671	536	472	65	154	680	770	500	400	90	134

PN16 LUGGED TYPE

Lever Operated Max. service pressure 16 bar, P-T rating : see page 15.

EN PN16 Design

PN16DJL □□

□□ of product coding are disc and seat material coding

Please refer to page 12.

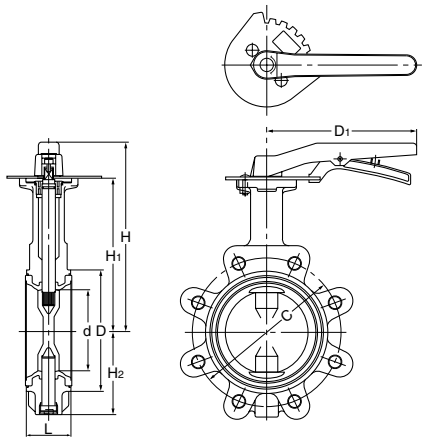

Dimensions (mm)

Nominal Size inch	Nominal Size mm	d	H	H1	H2	L	D	C	D1
2	50	50	191	147	67	43	90	125	180
2½	65	65	199	155	75	46	104	145	180
3	80	80	217	173	91	46	124	160	180
4	100	100	227	183	101	52	146	180	180
5	125	125	265	211	127	56	176	210	230
6	150	150	277	223	139	56	206	240	230
8	200	197	295	248	169	60	257	295	350

PN16 LUGGED TYPE

Gear operated Max. service pressure 16 bar, P-T rating : see page 15.

EN PN16 Design

G-PN16DJL □□

□□ of product coding are disc and seat material coding

Please refer to page 12.

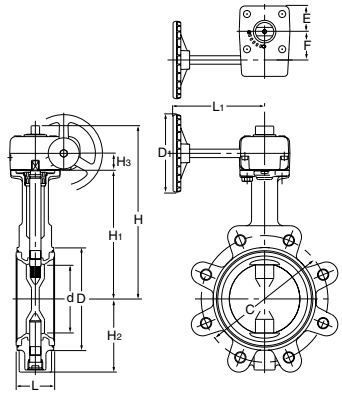

Dimensions (mm)

Nominal Size inch	Nominal Size mm	d	H	H1	H2	H3	L	D	C	D1	L1	E	F
2	50	50	194	147	67	19	43	90	125	80	122	29	28
2½	65	65	202	155	75	19	46	104	145	80	122	29	28
3	80	80	236	173	91	24	46	124	160	110	135	36	40
4	100	100	246	183	101	24	52	146	180	110	135	36	40
5	125	125	274	211	127	24	56	176	210	110	150	36	40
6	150	150	286	223	139	24	56	206	240	110	150	36	40
8	200	197	325	248	169	32	60	257	295	170	180	51	63
10	250	246	381	304	219	32	68	312	355	250	250	51	63
12	300	295	406	329	244	32	78	364	410	250	250	51	63
14	350	333	461	360	309	60	78	407	470	360	350	68	89
16	400	385	516	415	348	60	102	466	525	360	350	68	89
18	450	434	540	439	372	60	114	522	585	360	350	68	89
20	500	482	623	488	423	65	127	575	650	500	400	90	134
24	600	579	671	536	472	65	154	680	770	500	400	90	134

KITZ XJ Series Aluminum Butterfly Valves

A long stainless steel neck blocks transfer of the fluid heat to a valve operating device, which thus needs no insulation. Dew condensation is minimized also in case of cold water service.

Materials

Parts	Material
Body	Aluminum Die-cast / Equivalent ASTM B85-03-383.0
Neck	304 Stainless Steel
Stem	Stainless Steel (Equivalent ASTM A276 Type 410 or 420)
Disc	A351 Gr. CF8M
O-ring	EPDM
Rubber seat	EPDM
Bottom stem	Stainless Steel (Equivalent ASTM A276 Type 410)
Bearing	Bronze

P-T Rating for KITZ Butterfly valves (DJ/XJ)

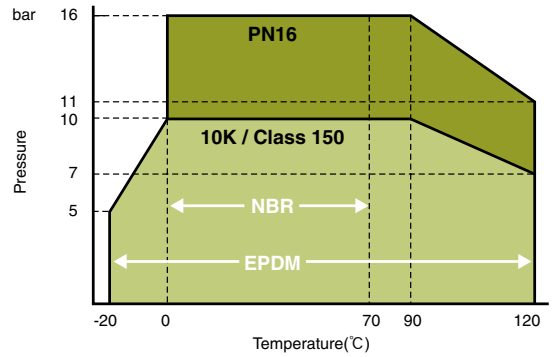

Service Temperature Range

NBR (Buna-N) seat	0˚C to +70˚C
EPDM seat	-20˚C to +120˚C*
Continuous service temperateure rang	0˚C to +100˚C

*There are some fluid type restrictions for the service at 120˚C. Contact KITZ for the details.

Long Neck Type

Prevented dew condensation

- A long stainless steel neck reduces conductivity of the fluid heat for prevention of dew condensation.
- Availability of valve body and neck insulation.
- Choice of actuators for automated valve operation.

Applications:

- Building utilities.
- Piping networks for cold water, hot water and other water supply.

Dew Condensation Test

Samples of KITZ XJ Series butterfly valves equipped with long necks (KITZ Product Code : G-10XJMEA) were tested at KITZ laboratory under the conditions introduced below. Lower surface temperature of gear boxes, atomospheric temperatures and atmospheric humidities were measured as the variable functions. The dew condensations boudary was estimated as illustrated below.

Test condition :

Line fluid : +5℃ cold water
Atmospheric temperature : +20℃ to +40℃
Valve insulation : 50mm glass wool (JIS A 9501) around the test valve with gear boxes exposed to the open air.

Note:

The estimation introduced here is a result of summary of the tests carried out within a test basin provided with constant temperature and humidity, and does not necessarily represent absolute values. Note that dew condensation preventative property of these valves may be affected by change of test environments such as extent of air transfer and variation of line fluid temperature, atmospheric humiditiy or condition of insulation. Thus, acceptance of allowance of ±5% over the boundary area is recommended.

G–10XJMEA Estimated Dew Condensation Boundary

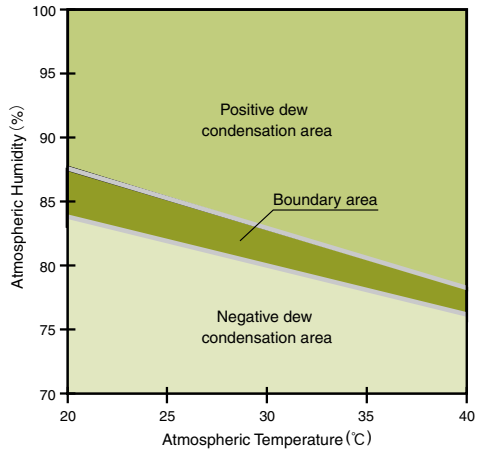

PN16 LONG NECK TYPE

Lever Operated Max. service pressure 16 bar, P-T rating : see page 15.

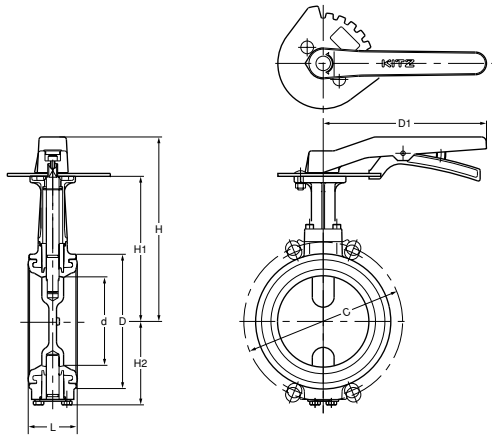

Fig. PN16XJME

• 316SS Disc, EPDM Seat

Dimensions

unit:mm

Size mm	Size inch	d	H	H1	H2	L	D	C	D1
50	2	50	176	132	66	43	93	125	180
65	2½	65	185	141	74	46	118	145	180
80	3	80	193	149	83	46	129	160	180
100	4	100	204	160	94	52	149	180	180
125	5	125	249	195	122	56	184	210	230
150	6	150	261	207	135	56	214	240	230

PN16 LONG NECK TYPE

Gear Operated Max. service pressure 16 bar, P-T rating : see page 15.

Fig. G-PN16XJME

• 316SS Disc, EPDM Seat

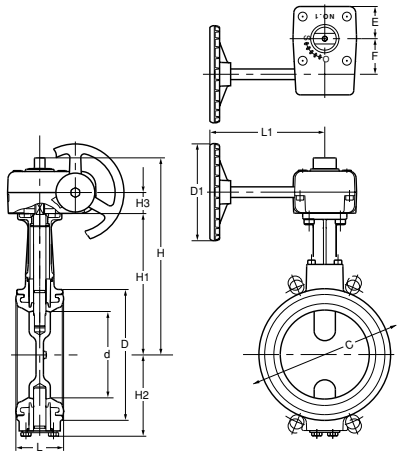

Dimensions

unit:mm

Size mm	Size inch	d	H	H1	H2	H3	L	D	C	D1	L1	E	F	Gear type
50	2	50	179	132	66	19	43	93	125	80	122	29	28	No.0
65	2½	65	188	141	74	19	46	118	145	80	122	29	28	No.0
80	3	80	212	149	83	24	46	129	160	110	135	36	40	No.1
100	4	100	223	160	94	24	52	149	180	110	135	36	40	No.1
125	5	125	258	195	122	24	56	184	210	110	150	36	40	No.1
150	6	150	270	207	135	24	56	214	240	110	150	36	40	No.1
200	8	196	311	234	183	32	60	258	295	170	180	51	63	No.2

Precautions for Trouble-free Operation of KITZ Butterfly Valves

Valve Selection

1. Ensure to select a valve with design specifications which meet the fluid type and the pressure and temperature conditions required.
2. Lubricants are applied to discs, rubber seats and PTFE seats as standard to protect their surfaces.
   Oil-free treated types are available as option. Contact KITZ Corporation or its local distributors for the details.
3. Contact KITZ Corporation or its local distributors for service with pulverulent bodies.

Storage and Handling

Valves must be stored in dry, clean and corrosion-free environment with no direct exposure to the sun, leaving valves open by 10。 for prevention of permanent distortion of resilient seats. Refrain from overloading valves and their actuators, such as storing them in piles or placing other objects on them.

Mounting on Pipelines

1. Valves must be mounted on flanges only after flanges have been welded to pipes and cooled down to the atmospherical temperature. Otherwise, welding heat may affect the quality of resilient seats.
2. Edges of welded flanges must be machined for smooth surface finish so that they may not damage resilient seats during valve mounting. Flange faces must be free from damage or deformation, and be cleaned to remove rust or any other foreign objects so that there will be no concern of external leakage through valve and flange connections. Gaskets are not required for mounting KITZ DJ series butterfly valves.
3. Clean flanges and pipe bores to thoroughly remove welding spatters, scales and other foreign objects which may have been left inside.
4. Accurate centering of each couple of upstream and downstream pipes is essential for trouble-free operation of valves mounted between them. Incorrect centering shown in **Fig. 1** must be by all means avoided.
5. For valve mounting, set jack bolts under the pipes for flat support at the same height, and adjust the flange-to-flange distance so that some 6 mm to 10 mm room may be allowed beside the both sides of the valve body.
   Remember that valves here must be left open only by 10。 from the fully closed position.
6. Set two bolts into the lower mounting guides of a valve and mount it carefully so that flange faces may not damage resilient seats. (**Fig. 2**)
7. Then set another two bolts into the upper mounting guides of a valve, ensuring the correct centering between pipes and the valve.
8. Trially open the valve to check to see if there is no disturbing contact between the valve disc and the flanges.
9. Remove the jack bolts, set all bolts around the valve body and tighten them alternately and diagonally till the flanges contact the valve body (**Fig. 3 and 4**).

Fig.1

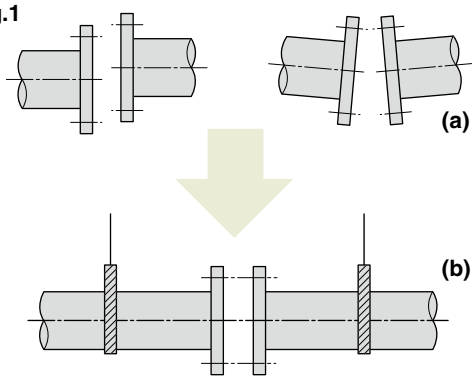

Fig.2

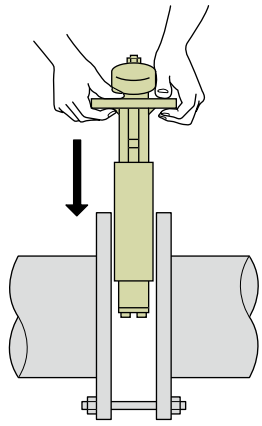

Fig.3

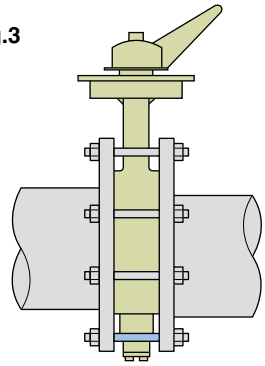

Fig.4

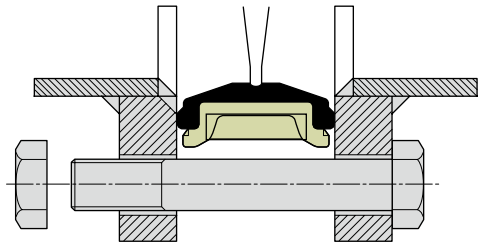

10. For mounting actuated valves, provide valve supports to prevent bending of valve necks and reduce valve and pipe vibration.
11. Don't step on valve necks or valve handwheels.
12. Don't mount valves of DN350 and larger with their operations upside down.
13. Don't mount butterfly valves directly to check valves or pumps, which may cause damage to them by the disc contacts.
14. Don't mount valves to downstream sides of elbows, reducers or regulating valves where fluid velocity changes. It is recommended to install valves approx-imately 10 times of the valve nominal sizes away from them for such cases.
15. Mount valves taking consideration of the effects which discs are given by fluid velocity or pressure chages in the pipings. Refer to the illustrations. **(Fig.5)**
    Contact KITZ Corporation or its local distributors for the details.

Valve Operation

1. Valves equipped with manual operators such as levers, and handles of gears must be ONLY MANUALLY operated. Application of an excessive external force to operate valves may result in malfunction of valves and their operators.
2. Ensure to fully open valves before a loop test of the piping system is carried out with line pressure higher than the nominal pressure of tested valves. Never use closed valves in place of blind flanges.
3. When valves need to be dismantled from pipes for maintenance or any other cause, ensure to thoroughly releave the line pressure beforehand. Loosening piping bolts under line pressure causes a danger. Any residual fluid left inside the pipeline must be completely drained.
4. Users should contact KITZ Corporation or its local distributors for technical advice, when valves should be continuously pressurized while left open by 30℃or less.
5. Don't use position indicators to operate valves, or overload position indicators. This may cause damage to indicators.
6. Ensure to use blind flanges when butterfly valves are mounted at the end of pipelines.
7. Standard actuators are referenced in this catalog for actuated valve operation. Contact KITZ Corporation or its local distributors for mounting optional actuators.
8. Contact KITZ Corporation for service at hopper or pump outlets.
9. Avoid touching gear operators and actuator stopper bolts accidentally.
10. It is recommended to perform periodical inspection for
    - Making sure of valve opening degree
    - Checking loosened bolts and leakage at each connection
    - Checking vibration and noise
11. Refer to instruction manual for other precautions. Also refer to actuator catalogs and instruction manuals for actuated valves.

Fig.5

● Mounting to bent pipe

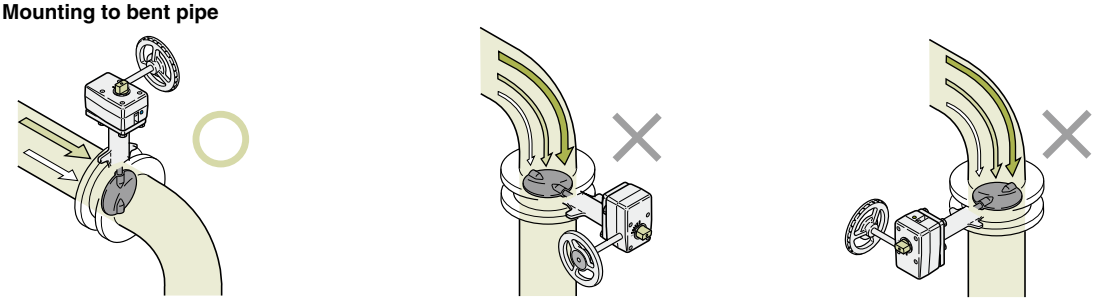

● Mounting to pump outlet

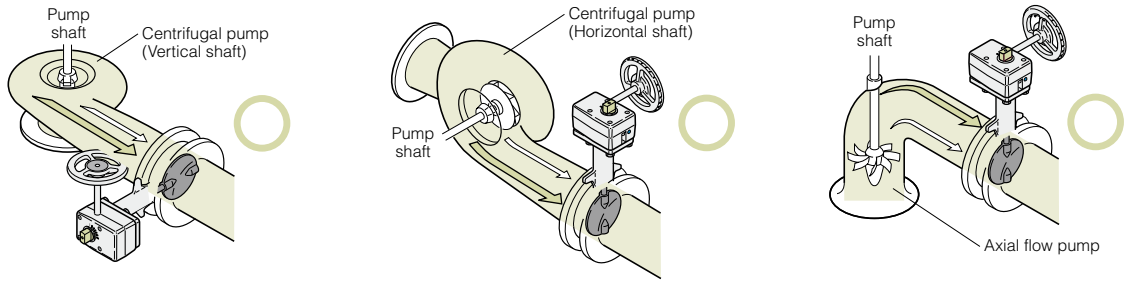

Note:
Centering with "centering sleeves" is required for the valves coupled with them for accurate centering for sizes of 80mm, 125mm and 200mm (XJ series).**(Fig.6)**

Fig.6

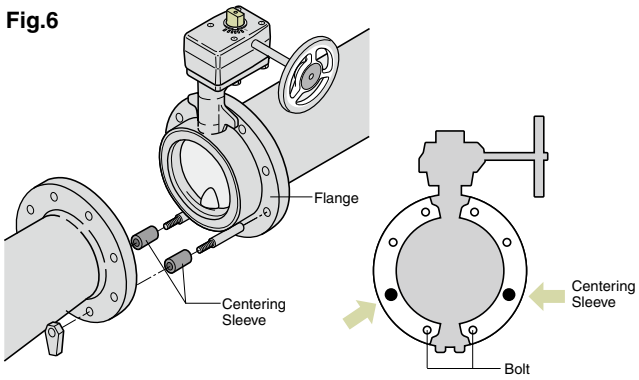

⚠ WARNING

Don't disassemble necks while the valve is pressurized to prevent stem blow-out. Also don't dismantle valve operating devices, since it may cause valve discs rotate and result valve malfunction.

⚠ CAUTION

Pressure-temperature ratings and other performance data published in this catalog have been developed from our design calculation, in-house testing, field reports provided by our customers and/or published official standards or specifications. They are good only to cover typical applications as a general guideline to users of KITZ products introduced in this catalog.

For any specific application, users are kindly requested to contact KITZ Corporation for technical advice, or to carry out their own study and evaluation for proving suitability of these products to such an application. Failure to follow this request could result in property damage and/or personal injury, for which we shall not be liable.

While this catalog has been compiled with the utmost care, we assume no responsibility for errors, impropriety or inadequacy. Any information provided in this catalog is subject to from-time-to-time change without notice for error rectification, product discontinuation, design modification, new product introduction or any other cause that KITZ Corporation considers necessary. This edition cancels all previous issues.

Read instruction manual carefully before use.

⚠ NOTICE

If any products designated as strategic material in the Foreign Exchange and Foreign Trade Law, Cabinet Order Concerning Control of Export Trade, Cabinet order Concerning Control of Foregn Exchange and other related laws and ordinances ("Foreign Exchange Laws") are exported to any foreign country or countries, an export license issued by the Japanese Government will be required under the Foreign Exchange Laws.

Further, there may be cases where an export license issued by the government of the United States or other country will be required under the applicable export-related laws and ordinances in such relevant countries.

The contract shall become effective subject to that a relevant export license is obtained from the Japanese Government.

A chrysanthemum-handle is a symbol of KITZ,
the brand of valve reliability

ISO 9001 certified since 1989

KITZ
KITZ CORPORATION

1-10-1, Nakase, Mihama-ku, Chiba 261-8577, Japan
International Sales Dept. Phone : 81-43-299-1730, 1732 and 1733
Fax : 81-43-299-0121

— Distributed by —

Printed in Japan

1103①ITP